BER0077

INSTRUCTION SHEET

MANUAL ROTATION

APPLICATION: B48C, B54C, B64C, B74C, SBG1048, SBG1054, SBG1064, SBG1074, SBG1064I, SBG1074I and SBG1084-L.

INSTALLATION

1. Install the chute according to the instructions contained in the snowblower Operator's Manual, with the four 1/16" thick spacers provided with this BER0077 kit.
2. **FIGURE 1:** Remove from the rotation worm support (item 1) the two 1/4"NC x 1" bolts, two 1/4" flat washers, two 1/4" lockwashers and two 1/4 " nuts (item 2). This hardware is not required for this assembly.
3. **FIGURE 1** Remove only the three 1/4" nuts (item 3) of the rotation worm support (item 1).
4. **FIGURE 1:** Install the rotation worm support preassembled (item 1) on the chute base. Secure with three 1/4" x 1" bolts, 1/4" lockwashers, 1/4" flat washers already installed (item 4) and the 1/4" nuts (item 3) previously removed.
5. **FIGURE 2:** Install the bracket (item 1) on the 3 point right or left hitch using two 3/8"NC x 1 1/4" bolts, 3/8" lockwashers and 3/8"NC nuts (items 2-3-4). Tighten securely.
6. **FIGURE 2:** Install handle support bracket (item 5) on the bracket (item 1) using a 3/4''NC x 1 1/2'' bolt, 3/4''lockwasher and 3/4''NC nut (items 6-7-8). Do not tighten.
7. **FIGURE 2:** Install the plastic grommet (item 9) in the handle support (item 10).
8. **FIGURE 2:** Insert handle support (item 10) inside the handle support bracket (item 5). Fasten loosely with a 3/8"NC x 1/2'' square head set screw (item 11).

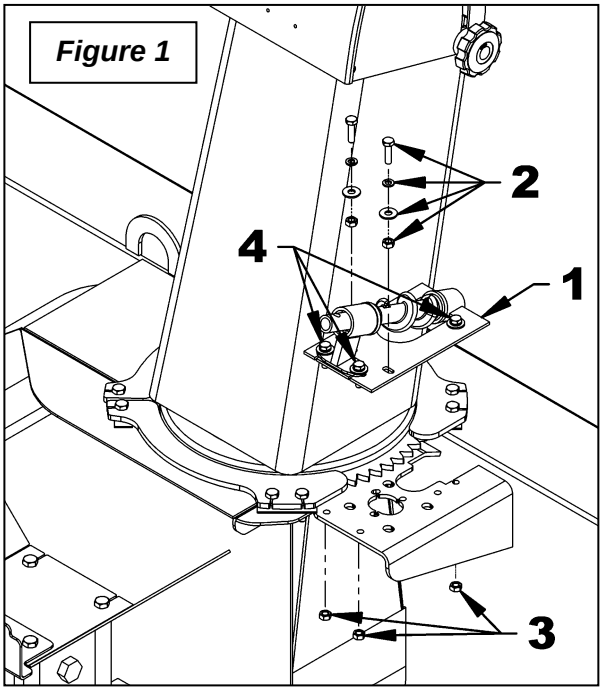

Figure 1

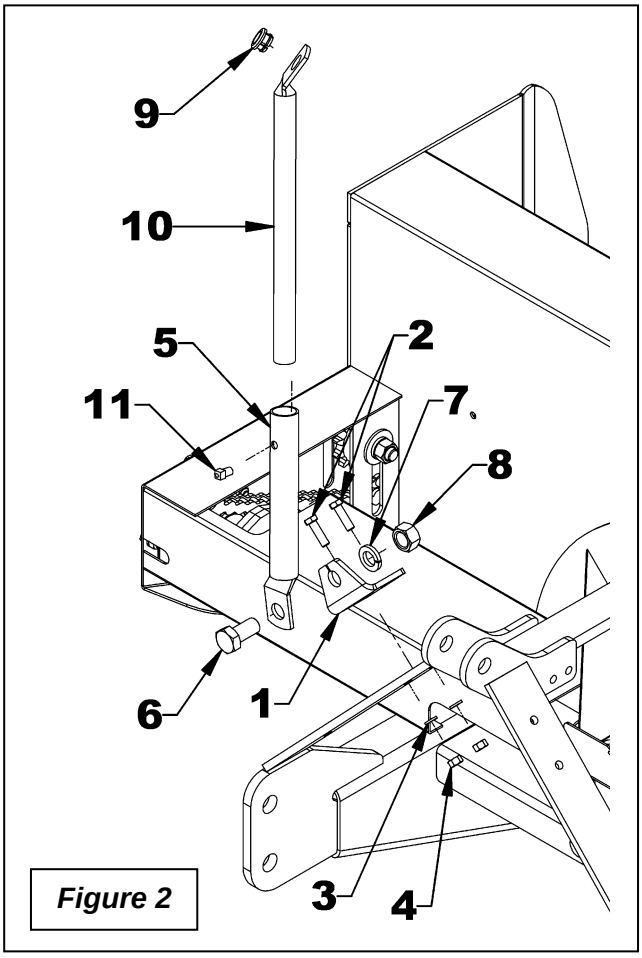

Figure 2

9. **FIGURE 3:** Install plastic handle (item 5) over the rotation handle (item 6).
10. **FIGURE 3:** Insert assembled rotation tube (item 1) inside the rotation worm assembly (items 2). Align holes and insert a 10-24NC x 1'' allen socket head capscrew (item 3) making sure the capscrew sinks into the worm. Secure with a nylon insert locknut (item 4). Adjust the height of the handle support according to your needs and shorten if necessary.
11. **FIGURE 3:** Insert the rotation handle (item 6) inside the grommet and inside the rotation tube (item 1). Select desired length, align nearest holes and secure with a 4mm x 80mm hairpin (item 8).
12. **FIGURE 4** Adjust the rotation tube support (item 3) and the rotation worm support (item 1) by moving them toward the chute so the rotation worm is engaged between the gear teeth of the chute. Make sure the rotation worm and the bushings are well aligned. Tighten slightly the three 1/4"NC x 1" bolts and the three 1/4"NC nuts (item 2).
13. **FIGURE 4:** Rotate the chute completely to the right then to the left using the rotation handle (item 4).
    - If the chute is too hard to turn it's because the rotation worm is engaged too deep between the gear teeth, move the worm slightly away from the gear teeth and try again.
    - If the chute rotates with difficulty because the teeth do not engage or engage incorrectly, adjust the rotation handle support toward the chute and redo the steps.
14. **FIGURE 4:** Make sure the worm engages completely when it reaches the end of the chute gear. The rotation handle is well adjusted when the chute rotates easily without straining. Tighten firmly the three 1/4"NC x 1" bolts and the three 1/4"NC nuts (item 5).
15. **FIGURE 4:** After the snowblower is mounted to the tractor, you may adjust the rotation handle position and height to a comfortable and safe operating position. When the desired position is set for working position, make sure the rotation handle is not interfering with any parts of the tractor while on transport position (snowblower raised to maximum). Tighten firmly the 3/8"NC x 1/2'' square head setscrew 3/8"NC x 1/2" (item 5) to the desired height. Then tighten firmly the 3/4"NC x 1 1/2" bolt (item 6) to the desired position.
16. Lubricate the rotation worm.

NOTE: To insure the manual rotation operates properly, the handle support (**fig.3**, item 7) must be positioned the closest possible to the top link mounting point of the three point hitch while making sure it does not come into contact with the operator's seat when the snowblower is fully raised.

CAUTION: To avoid personal injury, check the full lifting range of the snowblower, to ensure that the chute rotation handle is clear of the operator's area when the snowblower is in raised position.

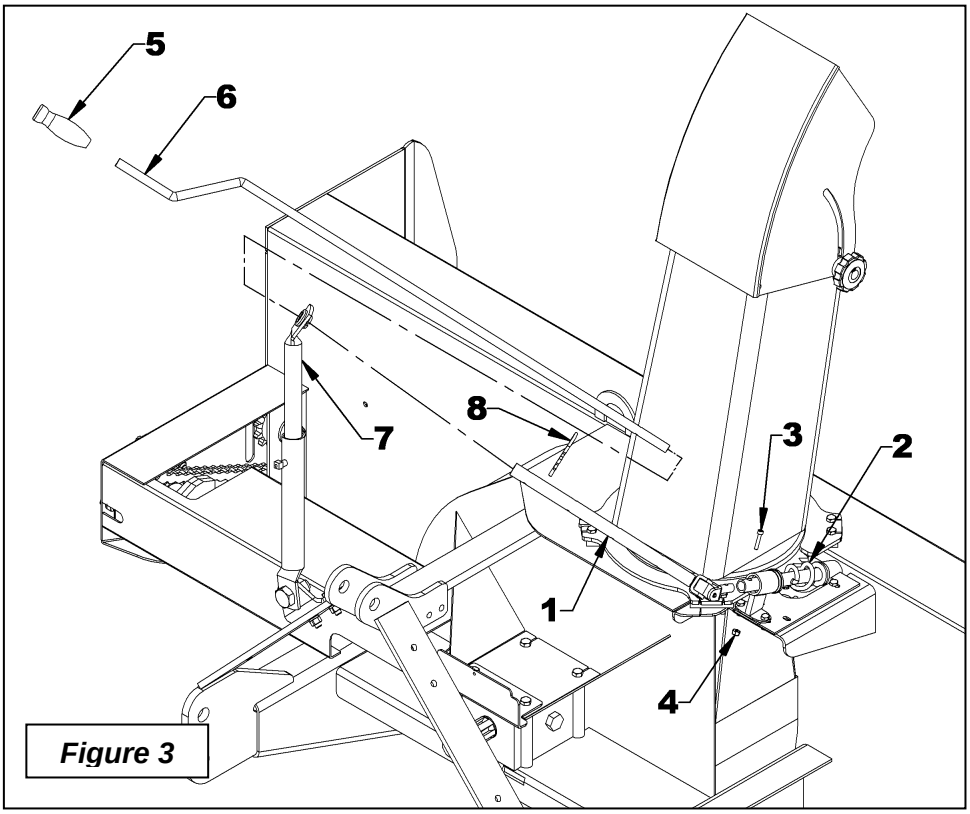

Figure 3

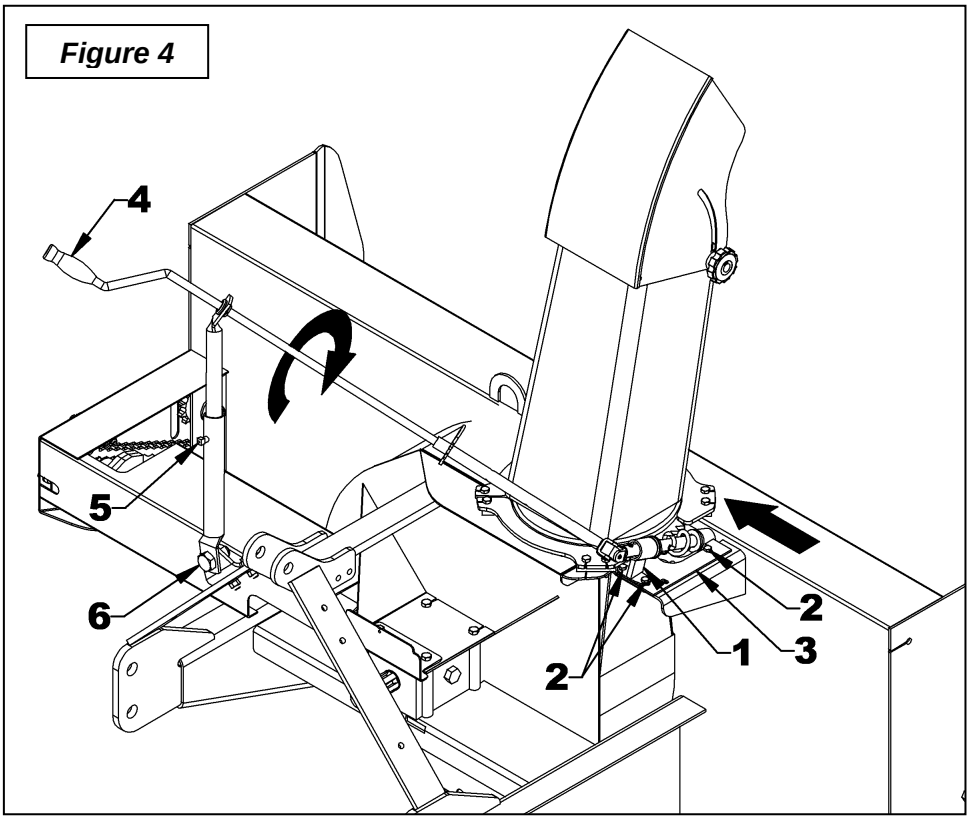

Figure 4

PARTS
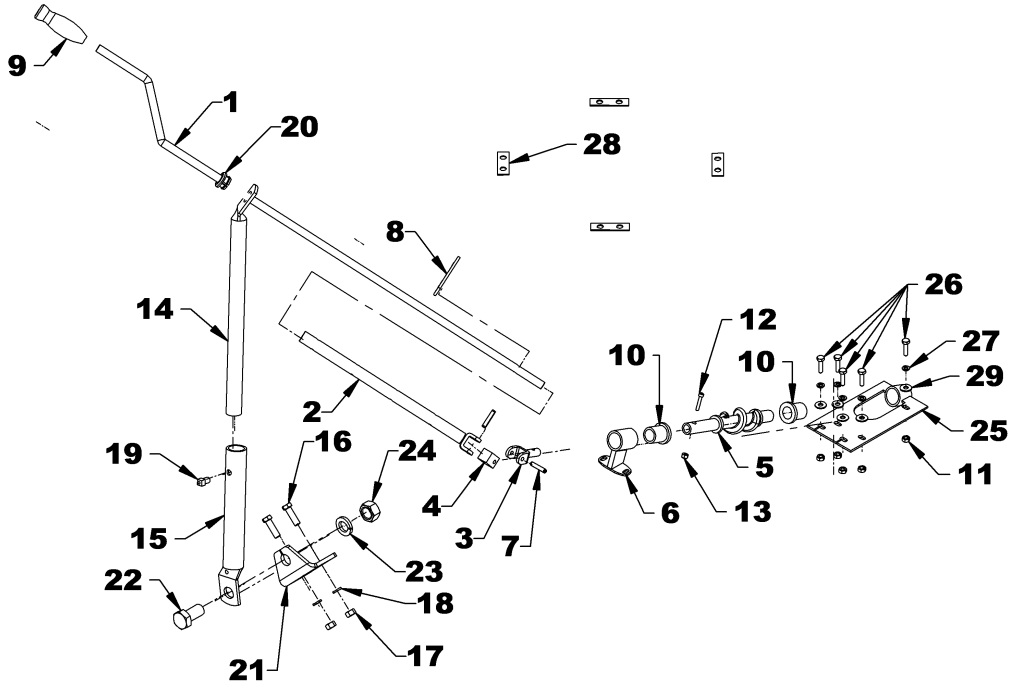
REF.	DESCRIPTION	QTY	PART #
1	Rotation handle	1	667425
2	Rotation tube	1	660188
3	Rotation yoke	1	659595
4	Universal block	1	658193
5	Rotation worm	1	665953
6	Rotation worm support	1	665952
7	Spring pin 1/4" x 1 1/4"	2	1600015
8	Hairpin 4mm x 80mm, PTD	1	1800002
9	Plastic handle	1	656797
10	Bushing 1 5/16" lg	2	657335
11	Hex. nut 1/4"NC, PTD	5	0900058
12	Allen socket head capscrew 10-24NC x 1" gr. 5	1	0800009
13	Nylon insert locknut 10-24 NC, PTD	1	1000002
14	Handle support	1	660187
15	Handle support bracket	1	660269
16	Hex. bolt 3/8"NC x 1 1/4" gr. 5, PTD	2	0100039
17	Hex. nut 3/8"NC PTD	2	0900003
18	Lockwasher 3/8", PTD	2	1200004
19	Setscrew 3/8"NC x 1/2", square head	1	0600006
20	Plastic Grommet	1	657390
21	Bracket	1	660388
22	Hex. bolt 3/4"NC x 1 1/2" gr. 5, PTD	1	0100115
23	Lockwasher 3/4", PTD	1	1200008
24	Hex. nut 3/4"NC, PTD	1	0900008
25	Rotation tube support	1	665951
26	Hex. bolt 1/4"NC x 1" gr. 5, PTD	5	0100004
27	Lockwasher 1/4", PTD	5	1200002
	For the Chute Installation		
28	Spacer for retaining plate 1/16" th	4	666191
29	Flat washer 1/4" PTD	5	1400002